Sydney: (02) 9890 9111
Brisbane: (07) 3715 2200
Melbourne: (03) 9212 4422
Perth: (08) 9373 9999
Adelaide: (08) 9373 9969
sales@machineryhouse.com.au
www.machineryhouse.com.au

Product Brochure For 3TJ1303

KNOB ASSY - #130~133+109

Suits: PT-300 (W613) + other models

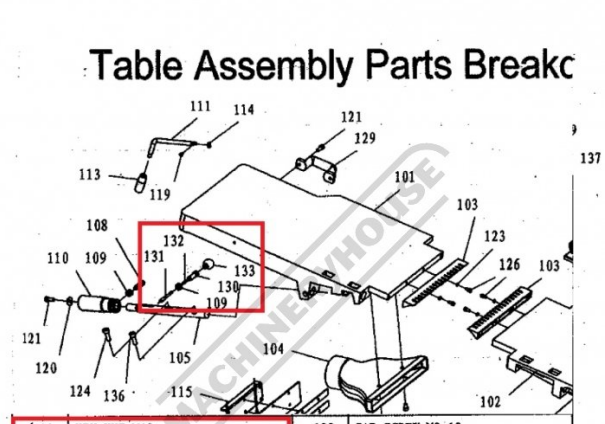

109	HEX NUT M12	128	CAP SCREW M8*12
110	INFEED HANDGRIP	129	HANDLE
111	INFEED LOCK LEVER	130	SPECIAL SCREW M12
112	OUTFEED LOCK LEVER	131	PLUNGER
113	PLASTIC KNOB M10	132	SPRING
114	RETAINING RING 12MM	133	KNOB M6